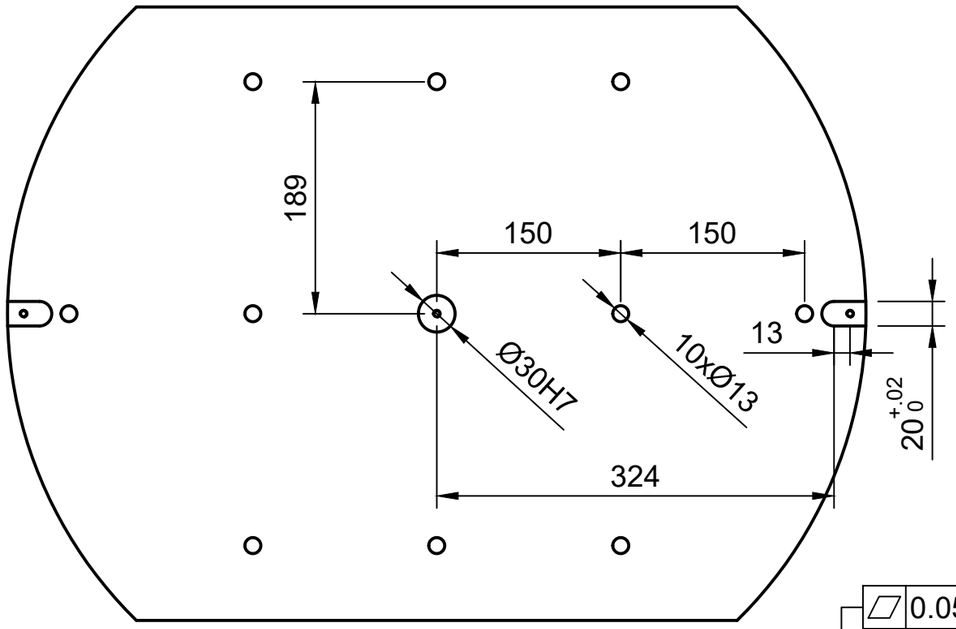

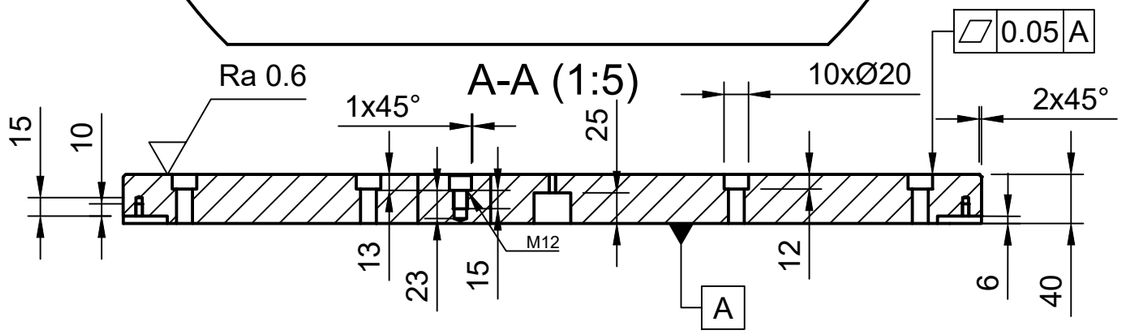

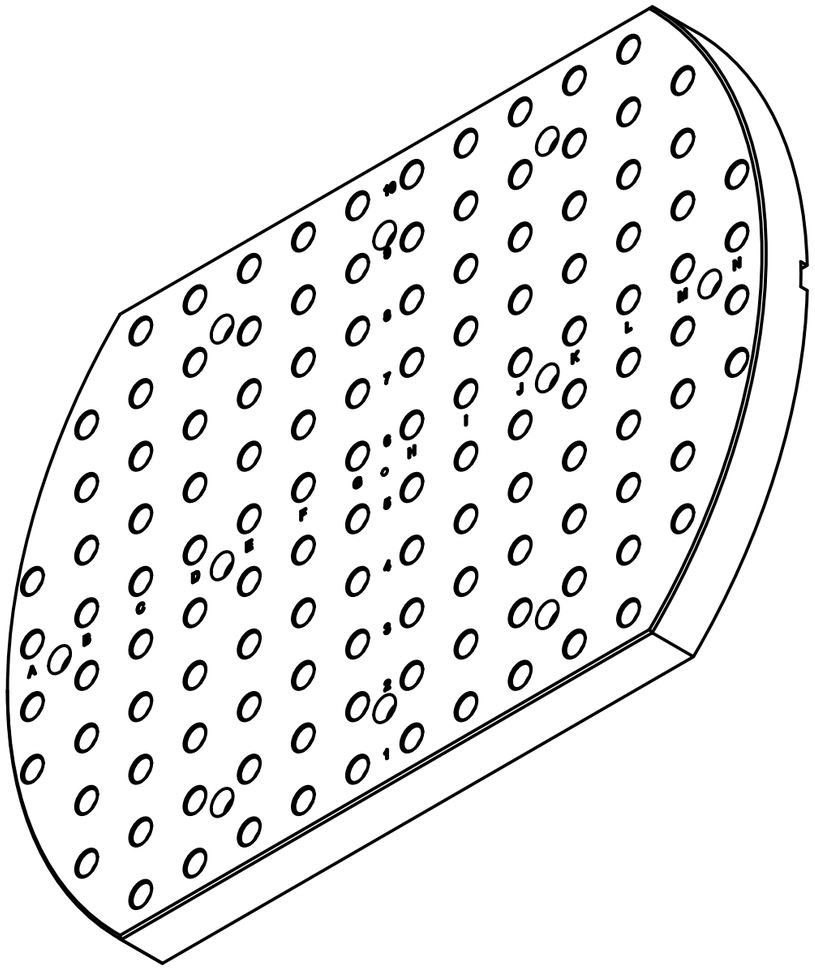

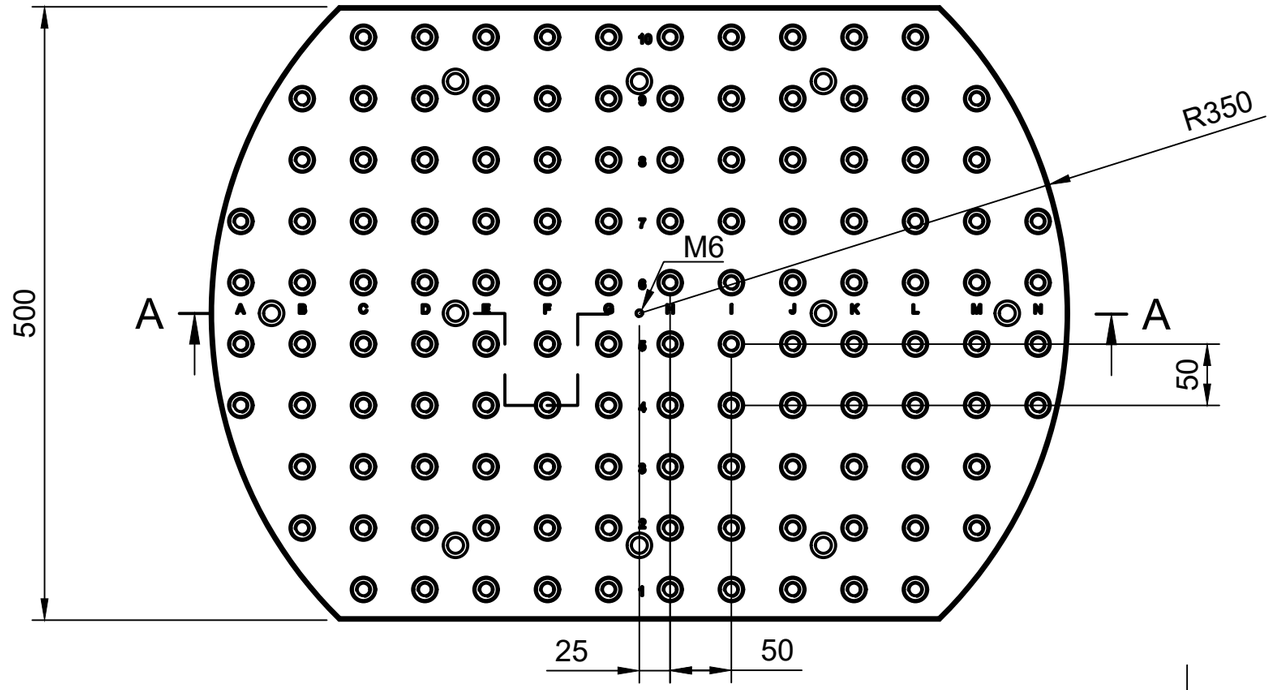

Dept.	Technical reference	Created by	Approved by
		Nino Schäppi 22.10.2019	
		Document type	Document status
		Title Rasterplatte 50T	DWG No.
			Rev. / Date of issue / Sheet 1/1